How to install the photovoltaic panel wiring diagram

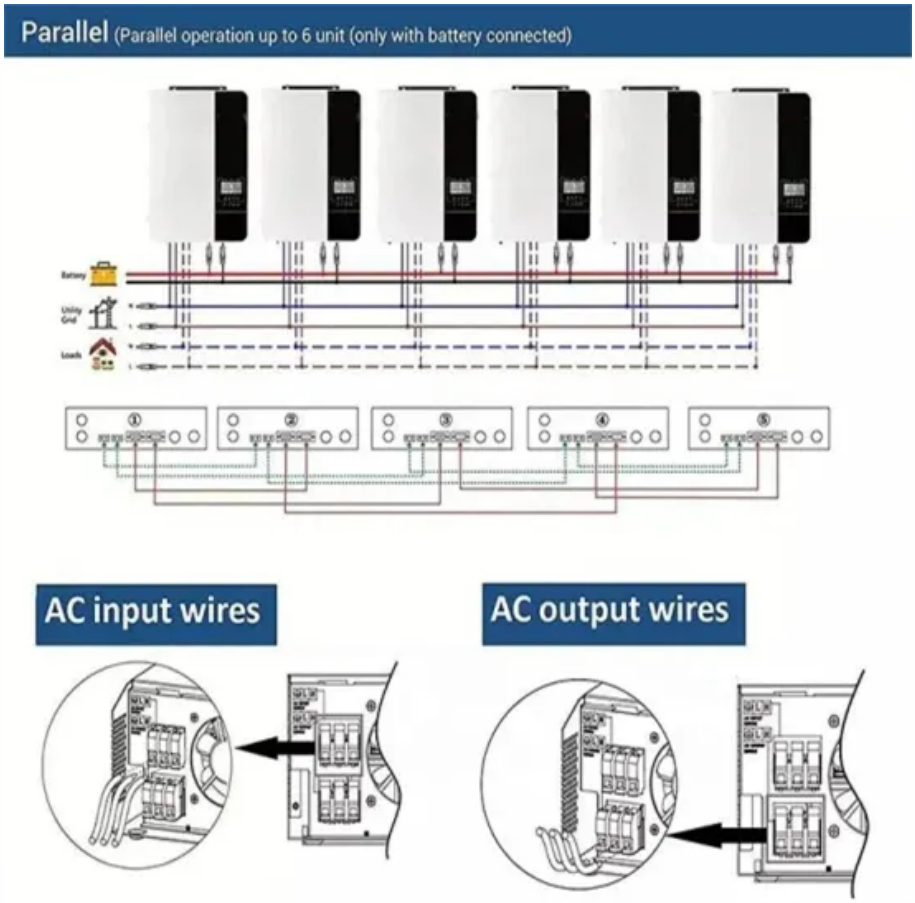

How to install the photovoltaic panel wiring diagram

Solar Panel Wiring Basics: Complete Guide & Tips to

We'll introduce different types of solar panel wiring + break down their steps. You'll also learn what to consider before reasonable wiring.

Update Google Chrome

Related resources Fix Chrome update problems and failed updates How your data stays safe when you install and update Chrome Check if your Chromebook is managed Give feedback about this article

Download and install Google Chrome

How to install Chrome Important: Before you download, check if Chrome supports your operating system and you've met all other system requirements.

Solar Panel Wiring Guide: How to Connect Panels for

This solar panel wiring guide explains different methods and includes practical wiring diagrams and actual examples of ways to design a

16 Ways People Find Purpose Around the World

A new study suggests that even across cultures, there is a lot of similarity in where humans find purpose in life and how it brings us fulfillment.

How Purpose Changes Across Your Lifetime

But is this really what purpose looks like? Alongside the self-help hype is a body of research on purpose across the lifespan, reaching back more than 30 years. Following people as

Install & use Android apps on your Chromebook

Install app updates If you get a notification on the bottom right of your screen that says "Updates available," select Update or Update all. You can also set up automatic updates for apps and the Play

Purpose , Greater Good

To psychologists, purpose is an abiding intention to achieve a long-term goal that is both personally meaningful and makes a positive mark on the world. The goals that foster a sense of

Solar Panel Wiring Diagram for Homes, RVs, and All

Our step-by-step solar panel wiring diagram makes it easy. Learn series vs. parallel & see the critical safety steps most DIYers miss. Wire it right

How to Find Your Purpose in Life

Are you struggling to discover your purpose? That may be because you feel isolated from other people. Here's how you can overcome that.

Purpose Definition , What Is Purpose

To psychologists, purpose is an abiding intention to achieve a long-term goal that is both personally meaningful and makes a positive mark on the world. The goals that foster a sense of

Install and manage extensions

Install an extension Important: You can't add extensions when you browse in Incognito mode or as a guest. Open the Chrome Web Store. Find and select the extension you want. Select Add to Chrome.

Seven Ways to Find Your Purpose in Life

Luckily for them, having a purpose in life is associated with all kinds of benefits. Research suggests that purpose is tied to having better health, longevity, and even economic success. It feels

The Complete Guide To Solar Panel Wiring Diagrams

Navigate solar panel installation with ease! Explore our comprehensive guide on Solar Panel Wiring Diagrams for efficient and safe setups.

Living With a Purpose Changes Everything

According to Strecher, the strength of one's life purpose-which involves a combination of living according to your values and goals, and striving to make a positive difference in the

Get Android apps & digital content from the Google Play Store

Find the Google Play Store app Get Android apps & digital content from the Google Play Store Use your phone or computer to install apps & content on other devices Pre-order or pre-register for apps,

Understanding Solar PV Wiring: A Diagram Breakdown

In this guide, we will break down the different elements of the solar PV wiring diagram, explain their functions, and provide tips and guidelines for proper

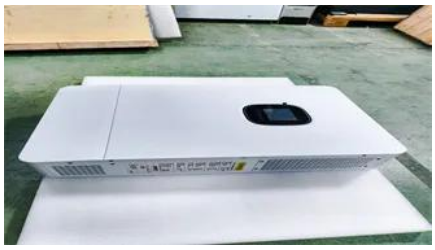

A Comprehensive Guide to Understanding PV Solar Panel Wiring

Learn how to wire a PV solar panel system with a comprehensive wiring diagram. Find step-by-step instructions and diagrams to help you connect your solar panels, inverters, batteries, and charge

Three Ways to See Meaning in Your

Life

In a series of articles, podcast episodes, and other resources, we're exploring why and how to deepen your sense of purpose at different stages of life. Of all of the facets of meaning,

Install apps on another device from your phone, tablet, or computer

To more easily manage apps across multiple devices, you can use your phone, tablet, or computer to install apps on another device, such as your watch, TV, or car.

Greater Good: The Science of a Meaningful Life

Based at UC Berkeley, Greater Good reports on groundbreaking research into the roots of compassion, happiness, and altruism.

Fix issues when you install Chrome

Download the installation file again. To install Chrome again, use the new file. If the installation still isn't working, use an offline installer. Computers with multiple user accounts. Computers with one user

Guide to Solar Panel Wiring Diagram Made Easy - PowMr

In this guide, we detail how to design your solar wiring diagram, select essential components, with examples for off-grid and residential solar

Use your phone or computer to install apps & content on other devices

Tap Install. Tip: To find an app that's compatible with a specific device, use the device search filters in the Google Play Store. Use your computer to install an app on another device To install an app on

Complete Solar Panel Wiring Diagram

Complete Solar Panel Wiring Diagram - Free download as PDF File (.pdf), Text File (.txt) or read online for free.

Google Chrome Help

Official Google Chrome Help Center where you can find tips and tutorials on using Google Chrome and other answers to frequently asked questions.

Mind & Body

Does your to-do list feel endless? Try this short, guided practice to help you reflect, reconnect, and release the pressure to do it all perfectly. A simple experiment turning a parking

The Complete Guide to Solar Panel Wiring Diagrams

Read on to find out more about solar panel connection diagrams and how to wire PV modules to achieve the best performance based on your unique

Contact Us

For catalog requests, pricing, or partnerships, please visit:
https://bachelorpartyvenue.co.za